The Water Hydraulics Co. Ltd.

JANUS CONTROL VALVES

PILOT OPERATED CHECK VALVE

SPECIFICATION	
Max Inlet Pressure	200 Bar
Operating Pressure Range	0 to 160 Bar
Flow Range	0-30 L/min
Flow Characteristics 3:1 9:1	CV Rate 0.62 Kv Rate 0.75 Cv Rate 0.41 Kv Rate 0.50
Feed Gallery Diameter 3:1 9:1	6mm 4mm
Porting	1/4" BSP (Parallel)
Construction Materials	A.I.S.I 316/Polymer
Media	Water
Cracking Pressure Free Flow	6 bar standard 1 bar available on request

Available as an individual valve or as a bolt on option to the 4/3 and 4/2 directional control valve, the PO Check offers bubble tight 100% seal operation for load or pressure holding applications.

To accommodate for a wide range of pilot operating pressures, the valves are offered in 3:1 and 9:1 pilot to seal area ratios. This will allow the actuation of the valve to be controlled with minimum input and prevent operation from residual pressures.

They are offered as either single or double port checked. The valve can be used for locking a water cylinder in a stationary position. Actuation can only occur when the required pilot pressure is available. A port adaptor block is also available for remote use, e.g. cylinder mounted.

Flow Characteristics

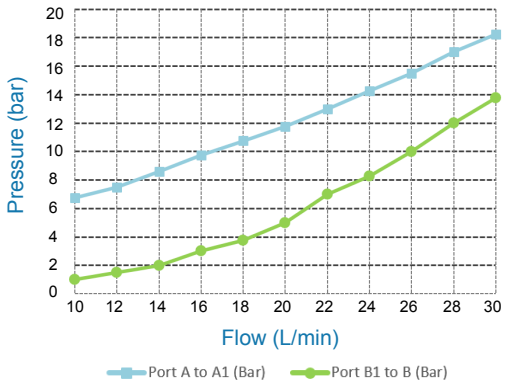

ORDERING CODES		STANDARD BUILD	MANIFOLD MOUNT
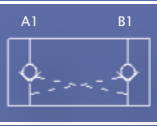	Double PO Check Valve 3:1 Ratio	213BJSW	2M13BJSW
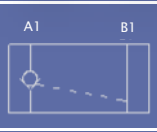	Single PO Check Valve 3:1 Ratio	211BJSW	2M11BJSW
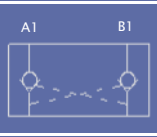	Double PO Check Valve 9:1 Ratio	222BJSW	2M22BJSW
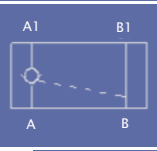	Single PO Check Valve 9:1 Ratio	219BJSW	2M19BJSW

The Water Hydraulics Co. Ltd.

JANUS CONTROL VALVES

PILOT OPERATED CHECK VALVE

213BJSW & 222BJSW

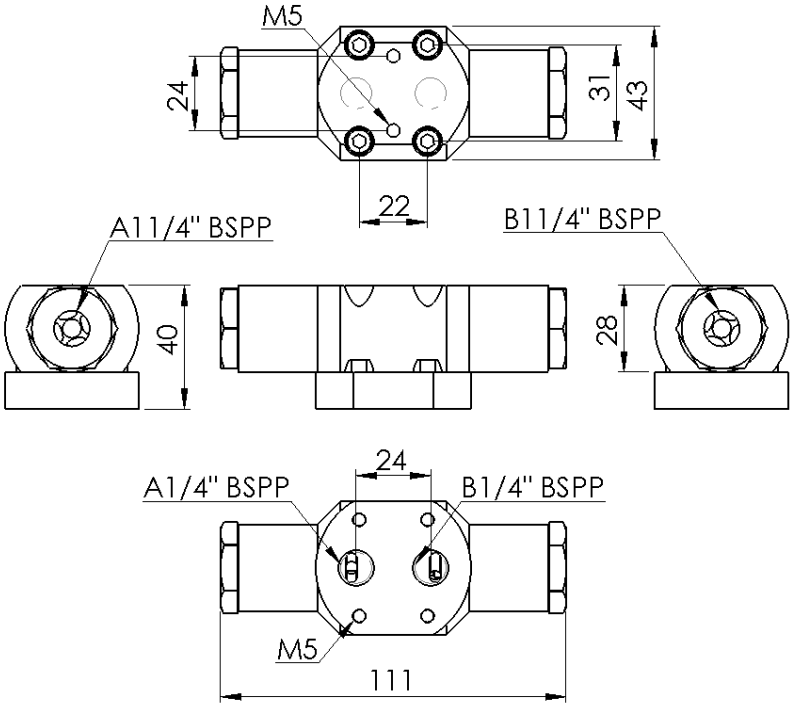

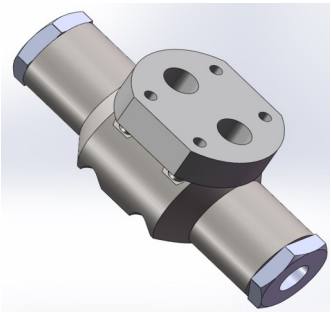

2M13BJSW & 2M22BJSW

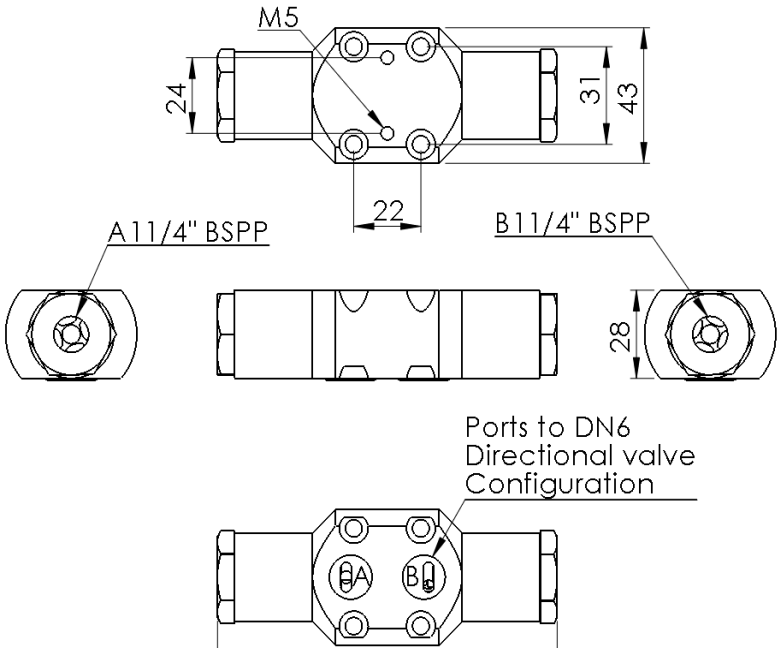

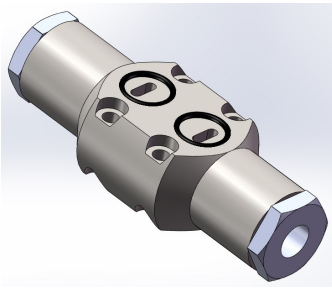

The Water Hydraulics Co. Ltd.

JANUS CONTROL VALVES

PILOT OPERATED CHECK VALVE

211BJSW & 219BJSW

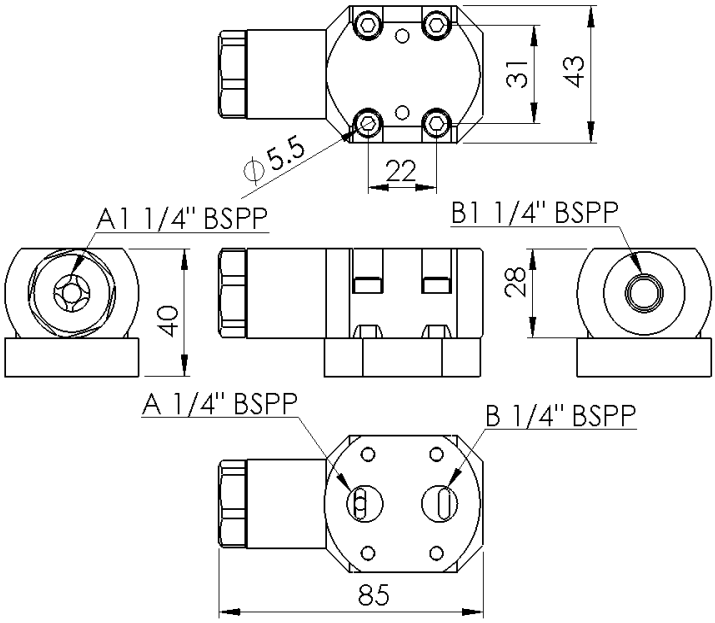

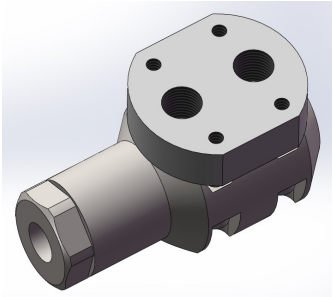

2M11BJSW & 2M19BJSW

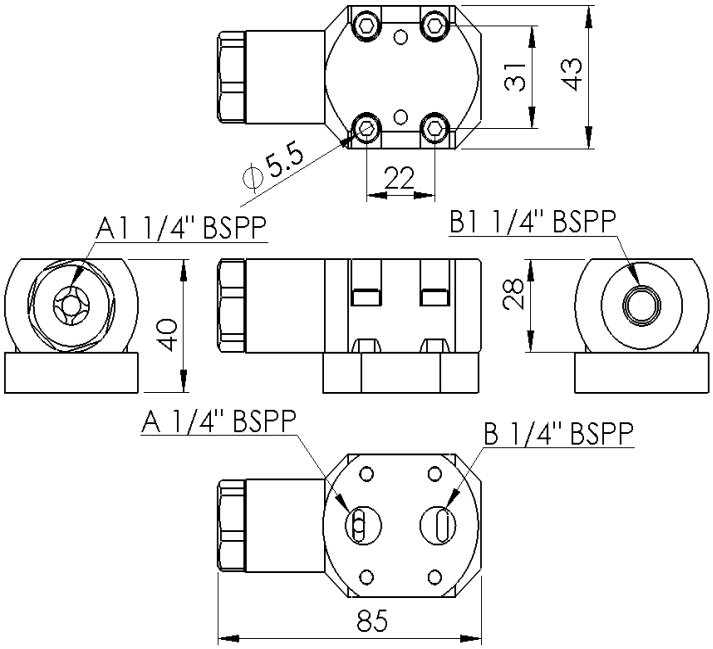

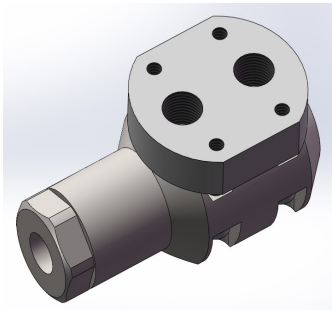

The Water Hydraulics Co. Ltd.

Alexandra House, English Street, Hull, East Yorkshire, HU3 2DJ, United Kingdom.

Tel: +44 (0)1482 595000, E-Mail: sales@waterhydraulics.co.uk.

England Website: www.waterhydraulics.co.uk

Whilst every endeavour has been made to ensure accuracy, this publication cannot be considered to represent part of any contract, whether expressed or implied. The publishers reserve the right to amend specification at their discretion.

F4N Fit For Nuclear

bsi. ISO 9001 Quality Management

FM 87247